Engine powered forklift 3.5 - 8.0 ton

TOYOTA
TONERO

TOYOTA

MATERIAL HANDLING

www.toyota-forklifts.eu

Engine powered forklifts 3.5 - 4.0 ton

Truck specifications					40-8FD35N	8FG35N	40-8FD40N	8FG40N
Identification	1.1	Manufacturer			TOYOTA	TOYOTA	TOYOTA	TOYOTA
	1.2	Model			40-8FD35N	8FG35N	40-8FD40N	8FG40N
	1.3	Drive			Diesel	LPG	Diesel	LPG
	1.4	Operator type			Rider Seated	Rider Seated	Rider Seated	Rider Seated
	1.5	Load capacity/rated load	Q	kg	4000 (3500)	4000 (3500)	4500 (4000)	4500 (4000)
	1.6	Load centre	c	mm	500 (600)	500 (600)	500 (600)	500 (600)
	1.8	Load distance, centre of drive axle to fork	x	mm	505	505	505	505
	1.9	Wheelbase	y	mm	1900	1900	1900	1900
Weight	2.1	Service weight		kg	5780	5700	6150	6070
	2.2	Axle load, with load, front/rear		kg	8110/1170	8090/1110	8830/1320	8810/1260
	2.3	Axle load, without load, front/rear		kg	2570/3210	2550/3150	2500/3650	2480/3590
Tyres	3.1	Tyre - pneumatic (P), pneumatic shaped cushion (SE), solid rubber (R)			P	P	P	P
	3.2	Tyre size, front			250-15-16PR	250-15-16PR	250-15-16PR	250-15-16PR
	3.3	Tyre size, rear			7.00-12-12PR	7.00-12-12PR	7.00-12-12PR	7.00-12-12PR
	3.5	Wheels, number front/rear (x=driven wheels)			2/2	2/2	2/2	2/2
	3.6	Track width, front	b_{10}	mm	1115	1115	1115	1115
	3.7	Track width, rear	b_{11}	mm	1100	1100	1100	1100
Dimensions	4.1	Tilt of mast/fork carriage forward/backward	α/β	deg	6/12	6/12	6/12	6/12
	4.2	Height, mast lowered	h_1	mm	2110	2110	2110	2110
	4.3	Free lift	h_2	mm	110	110	110	110
	4.4	Lift	h_3	mm	2950	2950	2950	2950
		Lift height	h_{23}	mm	3000	3000	3000	3000
	4.5	Height, mast extended	h_4	mm	4270	4270	4270	4270
	4.7	Height of overhead guard (cab)	h_6	mm	2285	2285	2285	2285
	4.8	Seat height	h_7	mm	1128	1128	1128	1128
	4.12	Coupling height	h_{10}	mm	420	420	420	420
	4.19	Overall length	l_1	mm	3925	3925	3980	3980
	4.20	Length to face of forks	l_2	mm	2925	2925	2980	2980
	4.21	Overall width	b_1	mm	1350	1350	1350	1350
	4.22	Fork dimensions	s/e/l	mm	50/150/1000	50/150/1000	50/150/1000	50/150/1000
	4.23	Fork carriage DIN 15 173, class/type A, B			IIIA	IIIA	IIIA	IIIA
	4.24	Fork-carriage width	b_3	mm	1170	1170	1170	1170
	4.31	Ground clearance, with load, below mast	m_1	mm	120	120	120	120
	4.32	Ground clearance, centre of wheelbase	m_2	mm	200	200	200	200
	4.33	Aisle width for pallets 1000 x 1200 crossways	A_{st}	mm	4315	4315	4365	4365
	4.34	Aisle width for pallets 800 x 1200 lengthways	A_{st}	Mm	4515	4515	4565	4565
	4.35	Turning radius	W_a	mm	2610	2610	2660	2660
	4.36	Internal turning radius	b_{13}	mm	940	940	990	990
Performance data	5.1	Travel speed, with/without load		km/h	23/24	23/24	23/24	23/24
	5.2	Lift speed, with/without load		m/s	0,56/0,57	0,56/0,57	0,56/0,57	0,56/0,57
	5.3	Lowering speed, with/without load		m/s	0,53/0,48	0,53/0,48	0,53/0,48	0,53/0,48
	5.6	Max. drawbar pull, with/without load		N	37400/13500	37000/13400	37000/13000	36000/13000
	5.7	Gradeability, with load		%	35	34	30	32
	5.8	Max. gradeability, with/without load		%	45/24	43/24	40/21	42/21
	5.10	Service brake			Hydraulic	Hydraulic	Hydraulic	Hydraulic
Combustion engine	7.1	Engine manufacturer/type			TOYOTA 1KD	TOYOTA 1FS	TOYOTA 1KD	TOYOTA 1FS
	7.2	Engine power acc. to ISO 1585		kW	55	63	55	63
	7.3	Rated speed		1/min	2200	2350	2200	2350
	7.4	No. of cylinders/displacement		cm^3	4/2982	4/3685	4/2982	4/3686
	7.5a	Fuel consumption according to VDI60		l/h	4,3	—	4,6	—
	7.5b	Fuel consumption according to VDI60		kg/h	—	4,2	—	4,5
Others	8.2	Operating pressure for attachments		bar	185	185	185	185
	8.3	Oil volume for attachments		l/min	128	128	128	128
	8.4	Sound level at the driver's ear according to EN 12 053		dB(A)	77	80	77	80

Performance data and dimensions are nominal and subject to tolerances.
Specifications are subject to change without notice.
Please obtain the latest specifications before contracting products.

Mast dimensions and rated capacities

Model			V						FV					FSV						
8FG/D35,40N	Lift height	h_{23}	3000	3300	3700	4000	4500	5000	3000	3300	3500	3700	4000	4000	4300	4500	4700	5000	5500	6000
	Lift	h_3	2950	3250	3650	3950	4450	4950	2950	3250	3450	3650	3950	3950	4250	4450	4650	4950	5450	5950
	Height, mast lowered	h_1	2110	2290	2490	2740	2990	3240	2110	2290	2390	2490	2740	2110	2160	2225	2290	2390	2540	2740
	Height, mast extended 1)	h_4	3850	4150	4550	4850	5350	5850	3880	4180	4380	4580	4880	4880	5180	5380	5580	5880	6380	6880
	Height, mast extended 2)	h_4	4270	4570	4970	5270	5770	6270	4270	4570	4770	4970	5270	5270	5570	5770	5970	6270	6770	7270
	Free lift, without load backrest	h_2	110	110	110	110	110	110	1280	1460	1560	1660	1910	1280	1330	1395	1460	1560	1710	1910
	Free lift, with load backrest	h_2	110	110	110	110	110	110	890	1070	1170	1270	1520	890	940	1005	1070	1170	1320	1520

1) Without load backrest

2) With load backrest; Height of standard load backrest is 1220 mm

Single tyre			V						FV					FSV						
8FG/D35N	Tilt range, forward	deg	6	6	6	6	6	6	6	6	6	6	6	6	6	6	6	6	6	6
	Tilt range, backward	deg	12	12	12	12	12	6	12	12	12	12	12	6	6	6	6	6	6	6
	Load capacity at 500 mm LC	kg	4000	4000	4000	4000	4000	3800	4000	4000	4000	4000	4000	4000	3800	3700	3700	3600	3000	2200
	Load capacity at 600 mm LC	kg	3500	3500	3500	3500	3500	3500	3500	3500	3500	3500	3500	3500	3500	3500	3500	3400 (3450)	2800 (2850)	2100 (2150)
8FG/D40N	Tilt range, forward	deg	6	6	6	6	6	6	6	6	6	6	6	6	6	6	6	6	6	6
	Tilt range, backward	deg	12	12	12	12	6	6	12	12	12	12	12	6	6	6	6	6	6	6
	Load capacity at 500 mm LC	kg	4500	4500	4500	4500	4500	4200	4500	4500	4500	4500	4500	4500	4500	4500	4500	4400	3500	2700
	Load capacity at 600 mm LC	kg	4000	4000	4000	4000	4000	4000	4000	4000	4000	4000	4000	4000	4000	4000	4000	4000	3500 (3550)	2700 (2750)

Dual tyre			V						FV					FSV						
8FG/D35N	Tilt range, forward	deg	6	6	6	6	6	6	6	6	6	6	6	6	6	6	6	6	6	6
	Tilt range, backward	deg	12	12	12	12	12	12	12	12	12	12	12	6	6	6	6	6	6	6
	Load capacity at 500 mm LC	kg	4000	4000	4000	4000	4000	3800	4000	4000	4000	4000	4000	4000	3800	3700	3700	3600	3500	3400
	Load capacity at 600 mm LC	kg	3500	3500	3500	3500	3500	3500	3500	3500	3500	3500	3500	3500	3500	3500	3500	3400	3300	3200
8FG/D40N	Tilt range, forward	deg	6	6	6	6	6	6	6	6	6	6	6	6	6	6	6	6	6	6
	Tilt range, backward	deg	12	12	12	12	12	12	12	12	12	12	12	6	6	6	6	6	6	6
	Load capacity at 500 mm LC	kg	4500	4500	4500	4500	4500	4400	4500	4500	4500	4500	4500	4500	4500	4500	4500	4400	4200	3300
	Load capacity at 600 mm LC	kg	4000	4000	4000	4000	4000	4000	4000	4000	4000	4000	4000	4000	4000	4000	4000	4000	4000	3300

( ) = Load capacity with PSC tyres

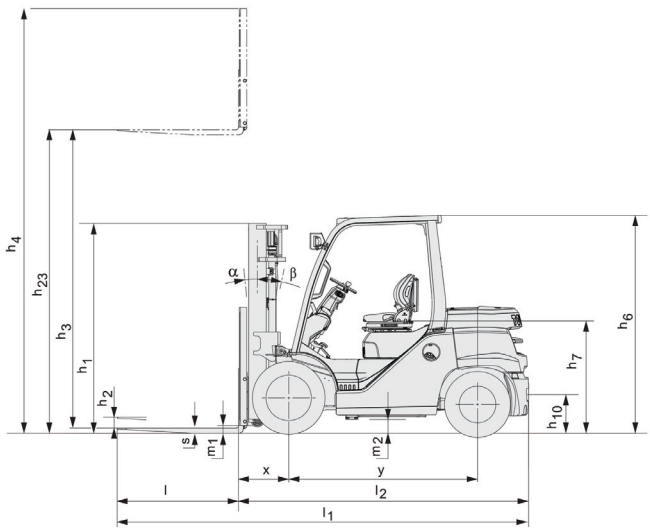

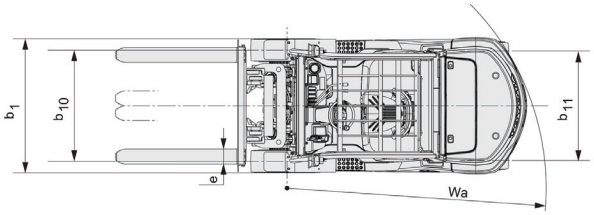

Engine powered forklifts 4.5 - 5.0 ton

Truck specifications					40-8FD45N	8FG45N	40-8FD50N	8FG50N
Identification	1.1	Manufacturer			TOYOTA	TOYOTA	TOYOTA	TOYOTA
	1.2	Model			40-8FD45N	8FG45N	40-8FD50N	8FG50N
	1.3	Drive			Diesel	LPG	Diesel	LPG
	1.4	Operator type			Rider Seated	Rider Seated	Rider Seated	Rider Seated
	1.5	Load capacity/rated load	Q	kg	4990 (4500)	4990 (4500)	5000	5000
	1.6	Load centre	c	mm	500 (600)	500 (600)	600	600
	1.8	Load distance, centre of drive axle to fork	x	mm	545	545	555	555
	1.9	Wheelbase	y	mm	2000	2000	2000	2000
Weight	2.1	Service weight		kg	6690	6610	7220	7140
	2.2	Axle load, with load, front/rear		kg	9920/1270	9900/1210	10910/1310	10880/1260
	2.3	Axle load, without load, front/rear		kg	2850/3840	2830/3780	3030/4190	3000/4140
Tyres	3.1	Tyre - pneumatic (P), pneumatic shaped cushion (SE), solid rubber (R)			P	P	P	P
	3.2	Tyre size, front			300-15-18-PR	300-15-18-PR	300-15-18PR	300-15-18PR
	3.3	Tyre size, rear			7.00-12-12PR	7.00-12-12PR	7.00-12-14-PR	7.00-12-14-PR
	3.5	Wheels, number front/rear (x=driven wheels)			2/2	2/2	2/2	2/2
	3.6	Track width, front	b_{10}	mm	1115	1115	1115	1115
	3.7	Track width, rear	b_{11}	mm	1100	1100	1100	1100
Dimensions	4.1	Tilt of mast/fork carriage forward/backward	α/β	deg	6/12	6/12	6/12	6/12
	4.2	Height, mast lowered	h_1	mm	2200	2200	2450	2450
	4.3	Free lift	h_2	mm	110	110	120	120
	4.4	Lift	h_3	mm	2950	2950	2950	2940
		Lift height	h_{23}	mm	3000	3000	3000	3000
	4.5	Height, mast extended	h_4	mm	4270	4270	4435	4435
	4.7	Height of overhead guard (cab)	h_6	mm	2375	2375	2375	2375
	4.8	Seat height/stand height	h_7	mm	1223	1223	1223	1223
	4.12	Coupling height	h_{10}	mm	420	420	420	420
	4.19	Overall length	l_1	mm	4110	4110	4170	4370
	4.20	Length to face of forks	l_2	mm	3110	3110	3170	3170
	4.21	Overall width	b_1	mm	1450	1450	1450	1450
	4.22	Fork dimensions	s/e/l	mm	50/150/1000	50/150/1000	60/150/1200	60/150/1200
	4.23	Fork carriage DIN 15 173, class/type A, B			IIIA	IIIA	IVA	IVA
	4.24	Fork-carriage width	b_3	mm	1170	1170	1170	1170
	4.31	Ground clearance, with load, below mast	m_1	mm	120	120	120	120
	4.32	Ground clearance, centre of wheelbase	m_2	mm	230	230	230	230
	4.33	Aisle width for pallets 1000 x 1200 crossways	A_{st}	mm	4495	4495	4565	4565
	4.34	Aisle width for pallets 800 x 1200 lengthways	A_{st}	mm	4695	4695	4765	4765
	4.35	Turning radius	W_a	mm	2750	2750	2810	2810
	4.36	Internal turning radius	b_{13}	mm	1045	1045	1030	1030
Performance data	5.1	Travel speed, with/without load		km/h	23,5/24	23,5/24	23,5/24	23,5/24
	5.2	Lift speed, with/without load		m/s	0,48/0,50	0,48/0,50	0,48/0,50	0,48/0,50
	5.3	Lowering speed, with/without load		m/s	0,54/0,49	0,54/0,49	0,54/0,49	0,54/0,49
	5.6	Max. drawbar pull, with/without load		N	37000/15000	36000/15000	37000/16000	36000/16000
	5.7	Gradeability, with load		%	28	30	25	23
	5.8	Max. gradeability, with/without load		%	36/22	38/22	32/22	31/22
	5.10	Service brake			Hydraulic	Hydraulic	Hydraulic	Hydraulic
Combustion engine	7.1	Engine manufacturer/type			TOYOTA 1KD	TOYOTA 1FS	TOYOTA 1KD	TOYOTA 1FS
	7.2	Engine power acc. to ISO 1585		kW	55	63	55	63
	7.3	Rated speed		1/min	2200	2350	2200	2350
	7.4	No. of cylinders/displacement		cm^3	4/2984	4/3687	4/2985	4/3688
	7.5a	Fuel consumption according to VDI60		l/h	5,0	—	5,3	—
	7.5b	Fuel consumption according to VDI60		kg/h	—	4,9	—	5,2
Others	8.2	Operating pressure for attachments		bar	185	185	185	185
	8.3	Oil volume for attachments		l/min	128	128	128	128
	8.4	Sound level at the driver's ear according to EN 12 053		dB(A)	77	80	77	80

Performance data and dimensions are nominal and subject to tolerances.
Specifications are subject to change without notice.
Please obtain the latest specifications before contracting products.

Mast dimensions and rated capacities

Model			V						FV					FSV							
8FG/D45N	Lift height	h_{23}	3000	3300	3700	4000	4500	5000	3000	3300	3500	3700	4000	—	4000	4300	4500	4700	5000	5500	6000
	Lift	h_3	2950	3250	3650	3950	4450	4950	2950	3250	3450	3650	3950	—	3950	4250	4450	4650	4950	5450	5950
	Height, mast lowered	h_1	2200	2350	2600	2800	3050	3300	2200	2350	2450	2600	2800	—	2120	2200	2270	2350	2450	2600	2800
	Height, mast extended 1)	h_4	3690	3990	4420	4770	5270	5770	3740	4040	4240	4440	4740	—	4740	5045	5240	5440	5740	6240	6740
	Height, mast extended 2)	h_4	4270	4570	4970	5270	5770	6270	4270	4570	4910	4970	5270	—	5270	5570	5770	5970	6270	6770	7270
	Free lift, without load backrest	h_2	110	110	110	110	110	110	1510	1660	1760	1910	2110	—	1430	1510	1580	1660	1760	1910	2110
	Free lift, with load backrest	h_2	110	110	110	110	110	110	980	1130	1230	1380	1580	—	900	980	1030	1130	1230	1380	1580

1) Without load backrest

2) With load backrest; Height of standard load backrest is 1220 mm

Model			V						FV					FSV							
8FG/D50N	Lift height	h_{23}	3000	3300	3700	4000	4500	5000	—	—	—	—	—	3700	4000	4300	—	4700	5000	5500	6000
	Lift	h_3	2940	3240	3640	3940	4440	4940	—	—	—	—	—	3640	3940	4240	—	4640	4940	5440	5940
	Height, mast lowered	h_1	2450	2600	2800	3050	3300	3550	—	—	—	—	—	2200	2270	2350	—	2450	2600	2800	3050
	Height, mast extended 1)	h_4	3905	4205	4605	4905	5405	5905	—	—	—	—	—	4635	4935	5235	—	5635	5935	6435	6935
	Height, mast extended 2)	h_4	4435	4735	5135	5435	5935	6435	—	—	—	—	—	5135	5435	5735	—	6135	6435	6935	7435
	Free lift, without load backrest	h_2	125	125	125	125	125	125	—	—	—	—	—	1330	1400	1480	—	1580	1730	1930	2180
	Free lift, with load backrest	h_2	125	125	125	125	125	125	—	—	—	—	—	830	900	980	—	1080	1230	1430	1680

1) Without load backrest

2) With load backrest; Height of standard load backrest is 1370 mm

Single tyre			V						FV					FSV							
8FG/D45N	Tilt range, forward	deg	6	6	6	6	6	6	6	6	6	6	6	—	6	6	6	6	6	6	6
	Tilt range, backward	deg	12	12	12	12	6	6	12	12	12	12	12	—	6	6	6	6	6	6	6
	Load capacity at 500 mm LC	kg	4990	4990	4990	4990	4990	4000	4990	4990	4990	4990	4990	—	4990	4900	4500	4500	4000	3000	2300
	Load capacity at 600 mm LC	kg	4500	4500	4500	4500	4500	4000 (4100)	4500	4500	4500	4500	4500	—	4500	4500	4200 (4300)	4200 (4250)	4000 (4050)	3000 (3050)	2300 (2350)
8FG/D50N	Tilt range, forward	deg	6	6	6	6	6	6	—	—	—	—	—	6	6	6	—	6	6	6	6
	Tilt range, backward	deg	12	12	12	12	6	6	—	—	—	—	—	6	6	6	—	6	6	6	6
	Load capacity at 600 mm LC	kg	5000	5000	5000	5000	5000	4000 (4150)	—	—	—	—	—	5000	4900 (4950)	4800 (4850)	—	4300 (4350)	4100 (4150)	3100 (3150)	2400 (2450)

Dual tyre			V						FV					FSV							
8FG/D45N	Tilt range, forward	deg	6	6	6	6	6	6	6	6	6	6	6	—	6	6	6	6	6	6	6
	Tilt range, backward	deg	12	12	12	12	12	12	12	12	12	12	12	—	6	6	6	6	6	6	6
	Load capacity at 500 mm LC	kg	4990	4990	4990	4990	4990	4600	4990	4990	4990	4990	4990	—	4990	4900	4700	4700	4600	4400	4200
	Load capacity at 600 mm LC	kg	4500	4500	4500	4500	4500	4400	4500	4500	4500	4500	4500	—	4500	4500	4400	4400	4300	4100	3900
8FG/D50N	Tilt range, forward	deg	6	6	6	6	6	6	—	—	—	—	—	6	6	6	—	6	6	6	6
	Tilt range, backward	deg	12	12	12	12	12	12	—	—	—	—	—	6	6	6	—	6	6	6	6
	Load capacity at 600 mm LC	kg	5000	5000	5000	5000	5000	4800	—	—	—	—	—	5000	4900	4800	—	4600	4500	4300	4100

( ) = Load capacity with PSC tyres

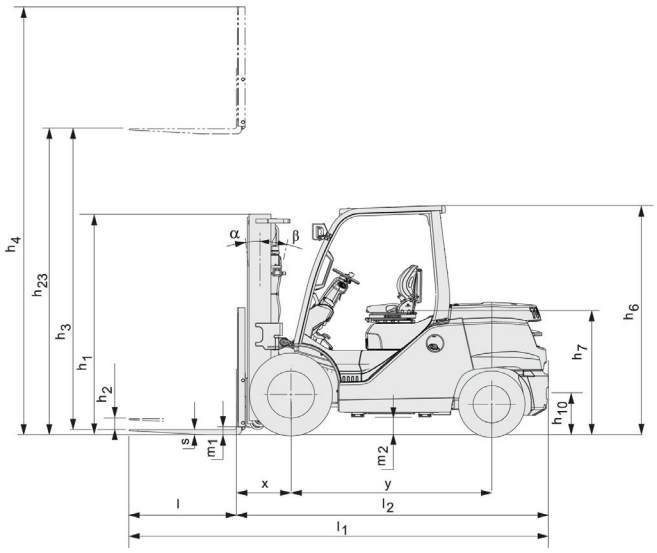

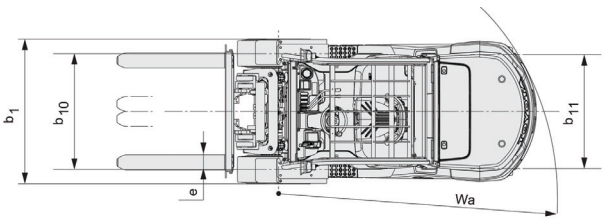

Engine powered forklifts 6.0 - 8.0 ton

Truck specifications					40-8FD60N	40-8FD70N	40-8FD80N
Identification	1.1	Manufacturer			TOYOTA	TOYOTA	TOYOTA
	1.2	Model			40-8FD60N	40-8FD70N	40-8FD80N
	1.3	Drive			Diesel	Diesel	Diesel
	1.4	Operator type			Rider Seated	Rider Seated	Rider Seated
	1.5	Load capacity/rated load	Q	kg	6000	7000	8000
	1.6	Load centre	c	mm	600	600	600
	1.8	Load distance, centre of drive axle to fork	x	mm	580	585	590
	1.9	Wheelbase	y	mm	2250	2250	2250
Weight	2.1	Service weight		kg	8360	9090	9940
	2.2	Axle load, with load, front/rear		kg	12850/1510	14330/1760	15860/2080
	2.3	Axle load, without load, front/rear		kg	3705/4655	3640/5450	3630/6310
Tyres	3.1	Tyre - pneumatic (P), pneumatic shaped cushion (SE), solid rubber (R)			P	P	P
	3.2	Tyre size, front			8.25-15-14PR	8.25-15-14PR	8.25-15-14PR
	3.3	Tyre size, rear			8.25-15-14PR	8.25-15-14PR	8.25-15-14PR
	3.5	Wheels, number front/rear (x=driven wheels)			4/2	4/2	4/2
	3.6	Track width, front	b_{10}	mm	1440	1440	1440
	3.7	Track width, rear	b_{11}	mm	1460	1460	1460
Dimensions	4.1	Tilt of mast/fork carriage forward/backward	α/β	deg	6/12	6/12	6/12
	4.2	Height, mast lowered	h_1	mm	2460	2460	2610
	4.3	Free lift	h_2	mm	125	125	130
	4.4	Lift	h_3	mm	2940	2935	2930
		Lift height	h_{23}	mm	3000	3000	3000
	4.5	Height, mast extended	h_4	mm	4435	4435	4440
	4.7	Height of overhead guard (cab)	h_6	mm	2385	2385	2385
	4.8	Seat height/stand height	h_7	mm	1128	1128	1128
	4.12	Coupling height	h_{10}	mm	485	485	485
	4.19	Overall length	l_1	mm	4690	4745	4790
	4.20	Length to face of forks	l_2	mm	3490	3545	3590
	4.21	Overall width	b_1	mm	1965	1965	1965
	4.22	Fork dimensions	s/e/l	mm	60/150/1200	65/150/1200	70/150/1200
	4.23	Fork carriage DIN 15 173, class/type A, B			IVA	IVA	IVA
	4.24	Fork-carriage width	b_3	mm	1700	1700	1700
	4.31	Ground clearance, with load, below mast	m_1	mm	125	125	125
	4.32	Ground clearance, centre of wheelbase	m_2	mm	250	250	250
	4.33	Aisle width for pallets 1000 x 1200 crossways	A_{st}	mm	5010	5065	5110
	4.34	Aisle width for pallets 800 x 1200 lengthways	A_{st}	Mm	5210	5265	5310
	4.35	Turning radius	W_a	mm	3230	3280	3320
	4.36	Internal turning radius	b_{13}	mm	930	980	1020
Performance data	5.1	Travel speed, with/without load		km/h	19/21	19/21	19/21
	5.2	Lift speed, with/without load		m/s	0,39/0,42	0,38/0,42	0,36/0,42
	5.3	Lowering speed, with/without load		m/s	0,53/0,48	0,53/0,48	0,53/0,48
	5.6	Max. drawbar pull, with/without load		N	46000/20500	45000/19500	45000/19300
	5.7	Gradeability, with load		%	24	21	19
	5.8	Max. gradeability, with/without load		%	34/24	30/21	27/18
	5.10	Service brake			Hydraulic	Hydraulic	Hydraulic
Combustion engine	7.1	Engine manufacturer/type			TOYOTA 1KD	TOYOTA 1KD	TOYOTA 1KD
	7.2	Engine power acc. to ISO 1585		kW	55	55	55
	7.3	Rated speed		1/min	2200	2200	2200
	7.4	No. of cylinders/displacement		cm^3	4/2982	4/2983	4/2984
	7.5	Fuel consumption according to VDI60		l/h	6,7	7,4	8,2
Others	8.2	Operating pressure for attachments		bar	210	210	210
	8.3	Oil volume for attachments		l/min	128	128	128
	8.4	Sound level at the driver's ear according to EN 12 053		dB(A)	79	79	79

Performance data and dimensions are nominal and subject to tolerances.
Specifications are subject to change without notice.
Please obtain the latest specifications before contracting products.

Mast dimensions and rated capacities

Model			V									FSV				
40-8FD60N	Lift height	h_{23}	3000	3300	3500	3700	4000	4500	5000	5500	6000	4000	4300	4700	5000	6000
	Lift	h_3	2940	3240	3440	3640	3940	4440	4940	5440	5940	3940	4240	4640	4940	5940
	Height, mast lowered	h_1	2460	2610	2710	2810	3060	3310	3560	3810	4060	2360	2460	2550	2810	3110
	Height, mast extended 1)	h_4	3980	4280	4480	4680	4980	5480	5980	6480	6980	5060	5360	5750	6160	7110
	Height, mast extended 2)	h_4	4435	4735	4935	5135	5435	5935	6435	6935	7435	5435	5735	6135	6435	7435
	Free lift, without load backrest	h_2	125	125	125	125	125	125	125	125	125	1365	1465	1565	1715	2065
	Free lift, with load backrest	h_2	125	125	125	125	125	125	125	125	125	990	1090	1180	1440	1740

Model			V									FSV				
40-8FD70N	Lift height	h_{23}	3000	3300	3500	3700	4000	4500	5000	5500	6000	4000	4300	4700	5000	6000
	Lift	h_3	2935	3235	3435	3635	3935	4435	4935	5435	5935	3935	4235	4635	4935	5935
	Height, mast lowered	h_1	2460	2610	2710	2810	3060	3310	3560	3810	4060	2360	2460	2550	2810	3110
	Height, mast extended 1)	h_4	3980	4280	4480	4680	4980	5480	5980	6480	6980	5060	5360	5750	6160	7110
	Height, mast extended 2)	h_4	4435	4735	4935	5135	5435	5935	6435	6935	7435	5435	5735	6135	6435	7435
	Free lift, without load backrest	h_2	125	125	125	125	125	125	125	125	125	1365	1465	1565	1715	2065
	Free lift, with load backrest	h_2	125	125	125	125	125	125	125	125	125	990	1090	1180	1440	1740

Model			V									FSV				
40-8FD80N	Lift height	h_{23}	3000	3300	3500	3700	4000	4500	5000	5500	6000	—	—	—	—	—
	Lift	h_3	2930	3230	3430	3630	3930	4430	4930	5430	5930	—	—	—	—	—
	Height, mast lowered	h_1	2610	2710	2810	3060	3310	3560	3810	4060	4310	—	—	—	—	—
	Height, mast extended 1)	h_4	4085	4385	4585	4785	5085	5585	6085	6585	7085	—	—	—	—	—
	Height, mast extended 2)	h_4	4440	4740	4940	5140	5440	5940	6440	6940	7440	—	—	—	—	—
	Free lift, without load backrest	h_2	130	130	130	130	130	130	130	130	130	—	—	—	—	—
	Free lift, with load backrest	h_2	130	130	130	130	130	130	130	130	130	—	—	—	—	—

1) Without load backrest
2) With load backrest; Height of standard load backrest is 1370 mm

Dual tyre			V									FSV				
40-8FD60N	Tilt range, forward	deg	6	6	6	6	6	6	6	6	6	6	6	6	6	6
	Tilt range, backward	deg	12	12	12	12	12	12	12	12	12	6	6	6	6	6
	Load capacity at 600 mm LC	kg	6000	6000	6000	6000	6000	6000	6000	6000	5700	5700	5700	5500	5500	5200
40-8FD70N	Tilt range, forward	deg	6	6	6	6	6	6	6	6	6	6	6	6	6	6
	Tilt range, backward	deg	12	12	12	12	12	12	12	12	12	6	6	6	6	6
	Load capacity at 600 mm LC	kg	7000	7000	7000	7000	7000	7000	4000	6700	6500	6700	6700	6700	6700	5700
40-8FD80N	Tilt range, forward	deg	6	6	6	6	6	6	6	6	6	—	—	—	—	—
	Tilt range, backward	deg	12	12	12	12	12	12	12	12	12	—	—	—	—	—
	Load capacity at 600 mm LC	kg	8000	8000	8000	8000	8000	8000	8000	7700	7500	—	—	—	—	—

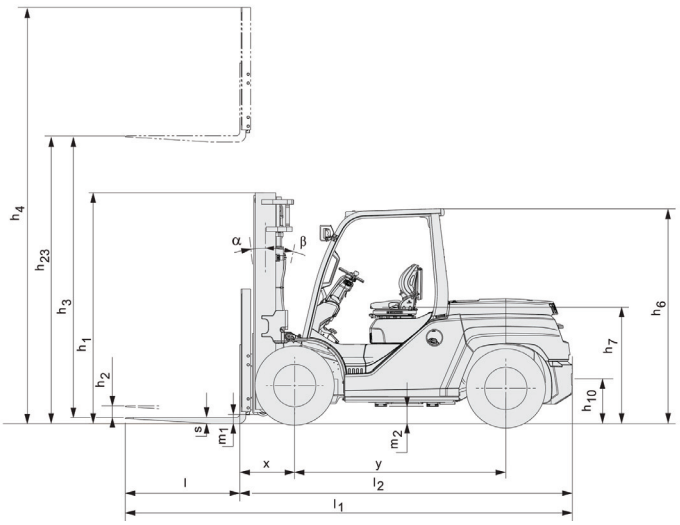

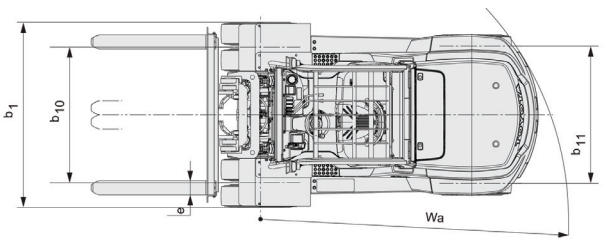

Standard equipments:

- Hydrodynamic transmission
- Toyota SAS (System of Active Stability*)
- Toyota OPS (Operator Presence Sensing)
- Toyota ORS seat (Operator Restraint System)
- Wide visible mast (MFH: 3000 mm)
- Load backrest [Height: 1220 mm (8FG/D35.40.45N); 1370 mm (8FG/D50.60.70.80N)]
- Long forks [Length: 1000 mm (8FG/D35.40.45N); 1200 mm (8FG/D50.60.70.80N)]
- Long forkbar [Length: 1170 mm (8FG/D35.40.45.50N); 1700 (8FG/D60.70.80N)]
- 3-way valve (A400)
- Dual brake system
- Pneumatic shaped cushion tyres
- Full hydraulic power steering
- Cyclone air cleaner with snorkel air intake
- Headlights
- Rear combination lights
- Combination meter including self diagnostic system
- Adjustable tilt steering column

** = When dual tyres are selected, the Active Control Rear Stabilizer function of the SAS system of Active Stability (SAS) is not included.*

TP-Technical Publications, Sweden — 745567-040, version 3, 1402

TOYOTA

MATERIAL HANDLING